WATERPROOF DIGITAL PROTRACTOR (HEAVY DUTY)

AUTOMATIC BACKLIGHT | ABSOLUTE LEVEL | IP54 WATERPROOF

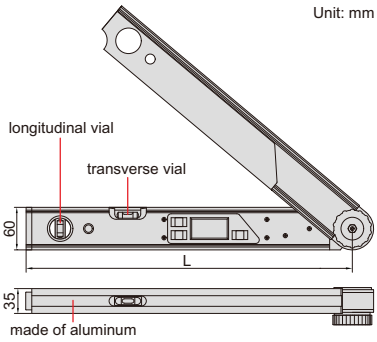

2174-225

- Suitable for setting horizontal and vertical mitre angles of cutting machines
- Buttons: ON/OFF, HOLD/SUP, SPR/CNR/MTR/BVL
- IP54 dust/waterproof
- With transverse and longitudinal vials
- 2xAAA batteries
- Absolute level, zero setting is not needed when batteries are replaced
- Backlight turns off in one minute after reading is stable, automatic power off in 5 minutes

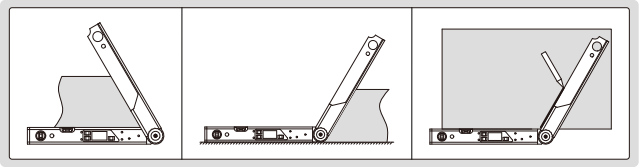

Code	Size (L)	Range	Resolution	Accuracy
2174-225	460mm	0-225°	0.05°	±0.10°

10

DIGITAL PROTRACTOR

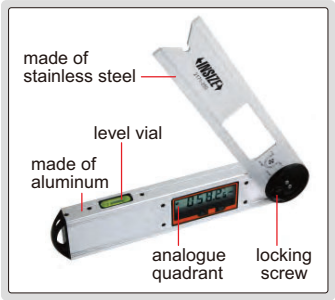

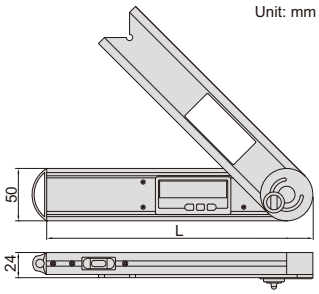

2171-250

- Buttons: on/off, hold (keep the reading), zero, ABS (absolute and incremental measurement)
- Fix the locking screw at 4 positions for different measuring ranges: 0°~225°, -225°~0°, -45°~180°, -180°~45°
- Remove the locking screw for 360° range
- With level vial
- Battery CR2032, automatic power off

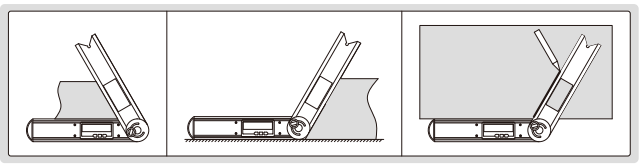

Code	Size (L)	Range	Resolution	Accuracy
2171-250	250mm	0-360°	0.05°	±0.15°