ATTENTION: NOT SUITABLE FOR 0.001MM DIAL INDICATORS

DATA OUTPUT

VIDEO

Unit: mm

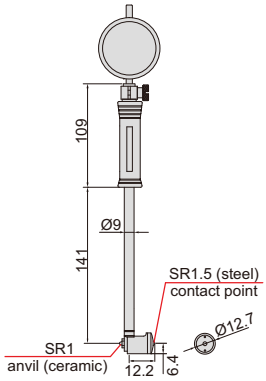

18-35mm

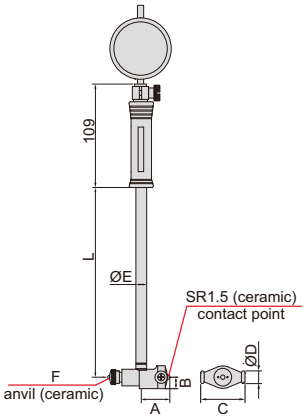

35mm up to 450mm

2322-160A

2122-35A

- Optional accessory: setting ring (code **6312**), long handle (code **7351**), bore gage setter

(mm)

Range	A	B	C	ØD	ØE	F	L
35-60mm	22	9	27	13	12.8	SR2	141
50-100mm	26	9	35	13	12.8	SR2	141
50-160mm	26	9	35	13	12.8	SR2	141
100-160mm	26	9	35	13	12.8	SR2	141
160-250mm	56.5	13	74.5	15	12.8	SR2	241
250-450mm	86.5	15	101.5	15	14.5	SR2.5	241

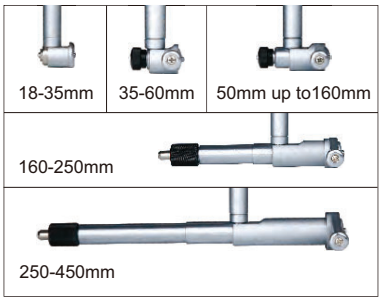

With dial indicator

Code	Range	Indicator	Accuracy	Repeatability
2322-35A	18-35mm	dial indicator, range 10mm, graduation 0.01mm (code **2308-10FA**)	±0.015mm	0.003mm
2322-60A	35-60mm		±0.018mm	0.003mm
2322-100A	50-100mm		±0.018mm	0.003mm
2322-160A	50-160mm		±0.018mm	0.003mm
2322-161A	100-160mm		±0.018mm	0.003mm
2322-250A	160-250mm		±0.018mm	0.003mm
2322-450A	250-450mm		±0.018mm	0.003mm

With digital indicator

Code	Range	Indicator	Accuracy	Repeatability
2122-35A	18-35mm	digital indicator, code **2108-10F**, range 12.7mm/0.5", resolution 0.002mm/0.0001" (can switch to: 0.01mm/0.0005")	±0.015mm	0.003mm
2122-60A	35-60mm		±0.018mm	0.003mm
2122-100A	50-100mm		±0.018mm	0.003mm
2122-160A	50-160mm		±0.018mm	0.003mm
2122-161A	100-160mm		±0.018mm	0.003mm
2122-250A	160-250mm		±0.018mm	0.003mm
2122-450A	250-450mm		±0.018mm	0.003mm
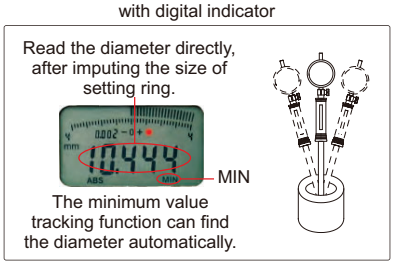
with digital indicator