DIAL PROTRACTOR

clamp for height gages (**optional**)

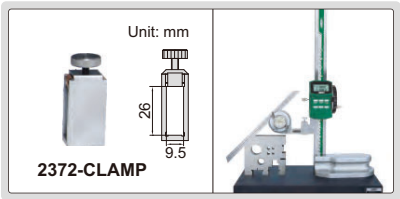

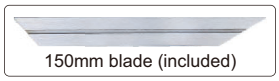

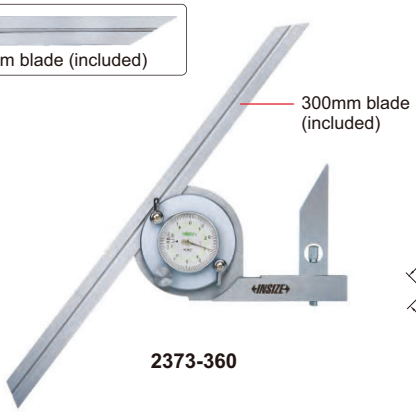

2373-360

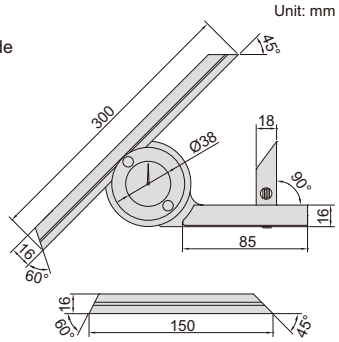

- Made of stainless steel
- Optional accessory: clamp (code **2372-CLAMP**), suitable for height gages **1156**, **1351** and **1250**

Code	Range	Graduation	Accuracy
2373-360	0-360°	5'	±5'

DIGITAL PROTRACTOR

VIDEO

DATA OUTPUT

clamp for height gages (**optional**)

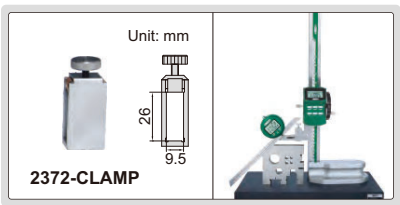

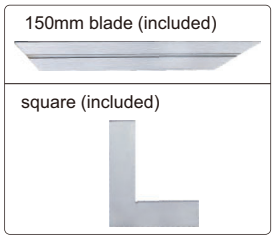

2172-360A

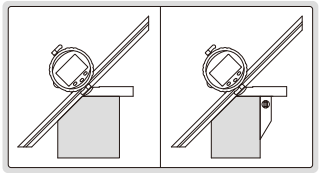

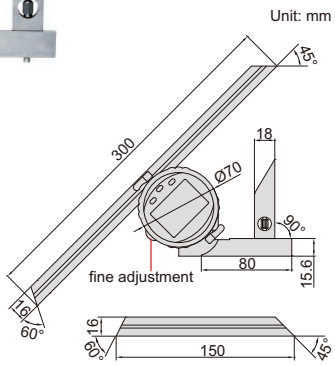

- Display in degree (for example 32.655°) and degree/minute/second (for example 32°39'30")
- SET button: preset the reading, change measuring direction
- MODE button: choose 0~90°, 0~180° or 0~360° display
- ZERO/ON/OFF button: zero and power on/off
- Battery CR2032, automatic power off
- Data output
- Supplied with square to set 90°
- Made of stainless steel
- Optional accessory: data output cable (code **7315-50**, **7302-SPC3B**), clamp (code **2372-CLAMP**), suitable for height gages **1156**, **1351** and **1250**

Code	Range	Resolution	Accuracy
2172-360A	0-360°	10"/0.005°	±5'

CYLINDER SQUARES

INSPECTION CERTIFICATE

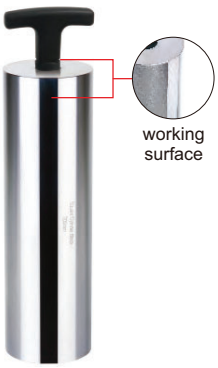

4710-200

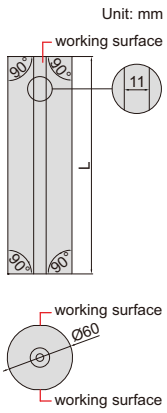

inspect 90° internal and external angles

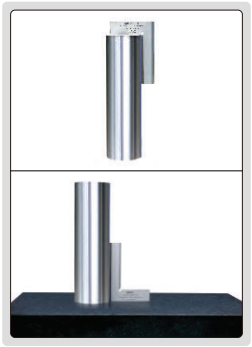

- Made of special alloy steel, hardness HRC58~60
- The handle can be removed

Code	Length (L)	Squareness
4710-200*	200mm	1μm
4710-300*	300mm	2μm

*Supplied with manufacturer inspection certificate